R 35 kN

ZE-35-R | rotating screw

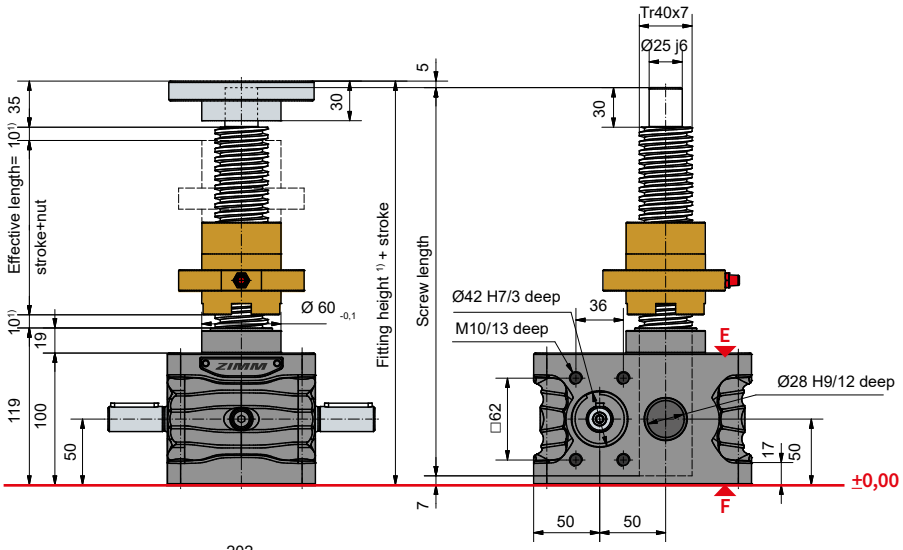

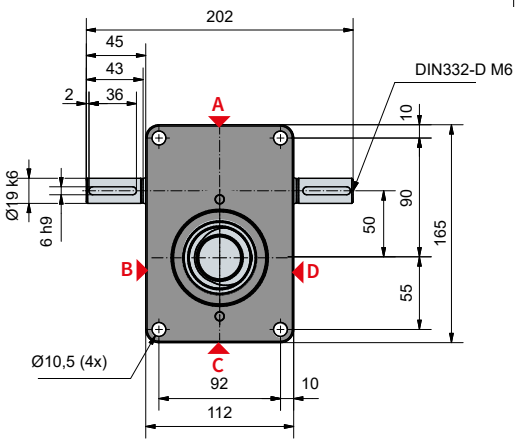

Standard configuration

Code	Gearbox (series)	Size	Version (variant)	Ratio	Screw	Stroke per drive shaft rotation
ZE-35-RN	ZE	35	R (rotating screw)	N (normal) 7:1	Tr 40x7	1,00 mm
ZE-35-RL				L (low) 28:1		0,25 mm

35 kN

Duty cycle thermal limit

Ratio „N“ (7:1)

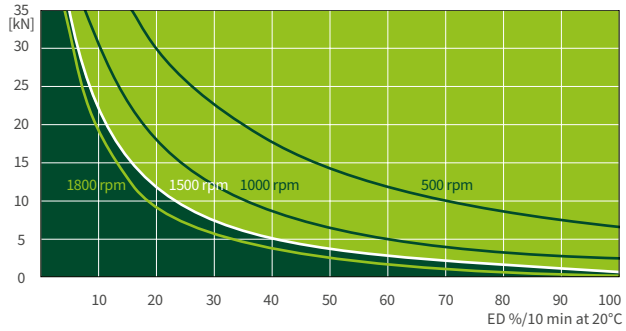

Ratio „L“ (28:1)

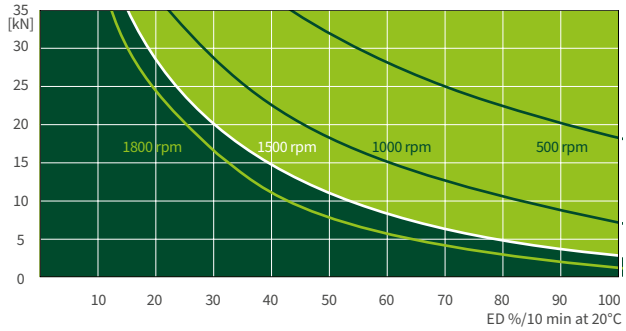

These curves are for guidance under standard industrial conditions (ambient temperature 20°C etc.) and correct maintenance (lubrication etc.).
They are based on the ZIMM standard trapezoidal thread Tr 40x7. The operation cycles can be many times longer, when using ball screws.
In case you need an even longer duration or performance, look up about our high performance gearboxes ZE-H (identical dimensions) on the pages 70 and 71.